Roller arrangements

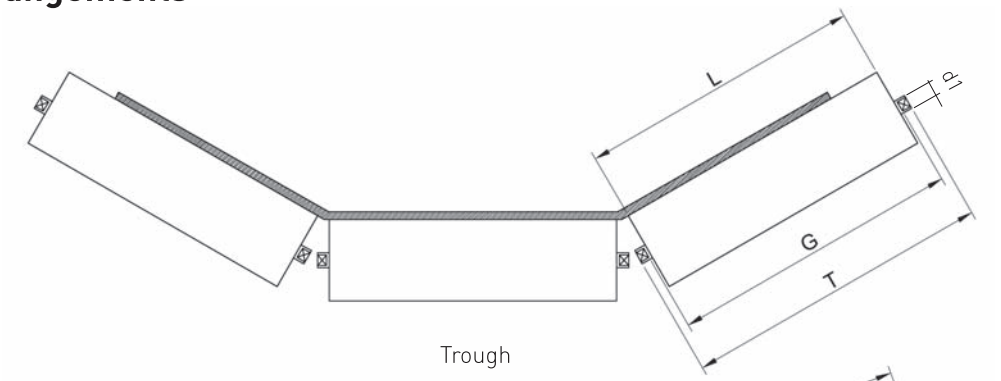

Trough

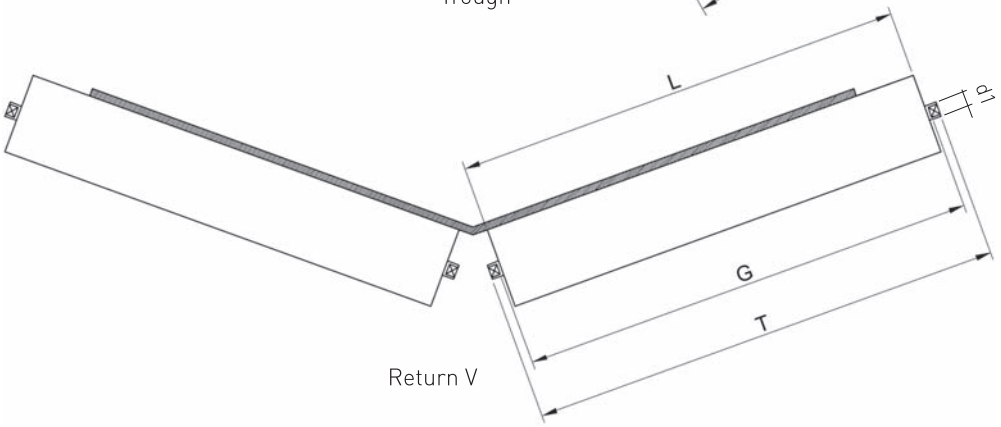

Return V

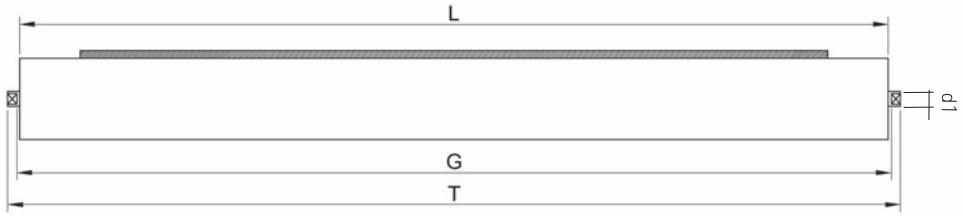

Return Flat

Dimensions according to DIN 15207

Belt width	3 Rollers				2 Rollers				1 Roller			
	L	G	d1∅20 T	d1>∅20 T	L	G	d1∅20 T	d1>∅20 T	L	G	d1∅20 T	d1>∅20 T
400	160	168	186	192								
500	200	208	226	232					500	508	526	532
650	250	258	276	282	250	258	276	282				
800	315	323	341	347	315	323	341	347	600	608	626	632
1000	380	388	406	412	380	388	406	412	750	758	776	782
1200	465	473	491	497	465	473	491	497	950	958	976	982
1400	530	538	556	562	600	608	626	632	1150	1158	1176	1182
1600	600	608	626	632	700	708	726	732	1400	1408	1426	1432
1800	670	678	696	702	800	808	826	832	1600	1608	1626	1632
2000	750	758	776	782	900	908	926	932	1800	1808	1826	1832
2200	800	808	826	832	1000	1008	1026	1032	2000	2008	2026	2032
					1100	1108	1126	1132	2200	2208	2226	2232
					1200	1208	1226	1232	2400	2408	2426	2432
	(mm)				(mm)				(mm)			

Common axle

A0

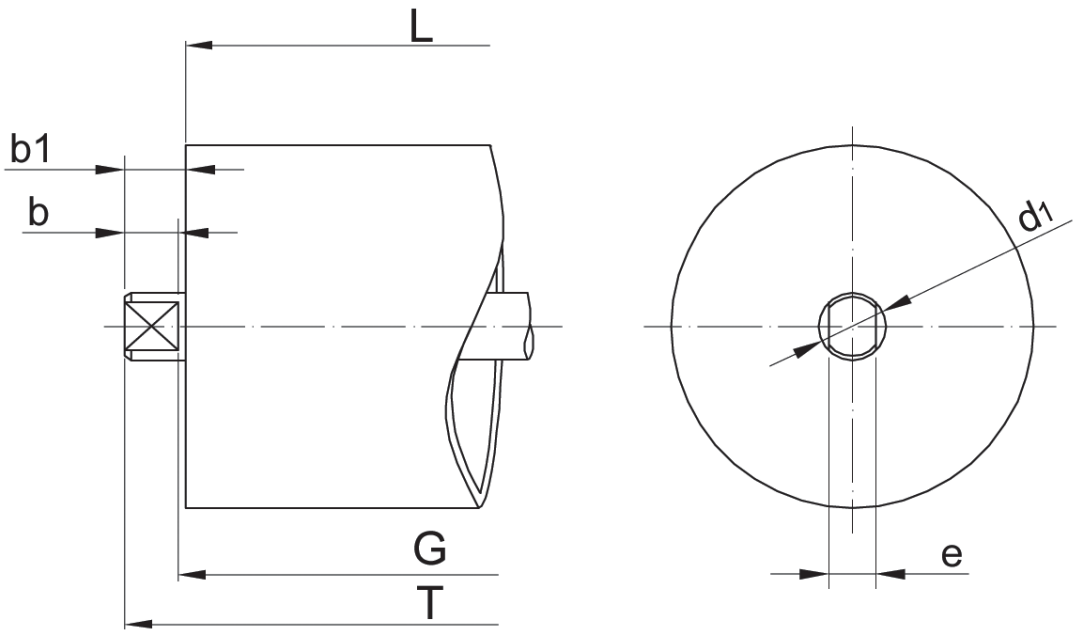

A0

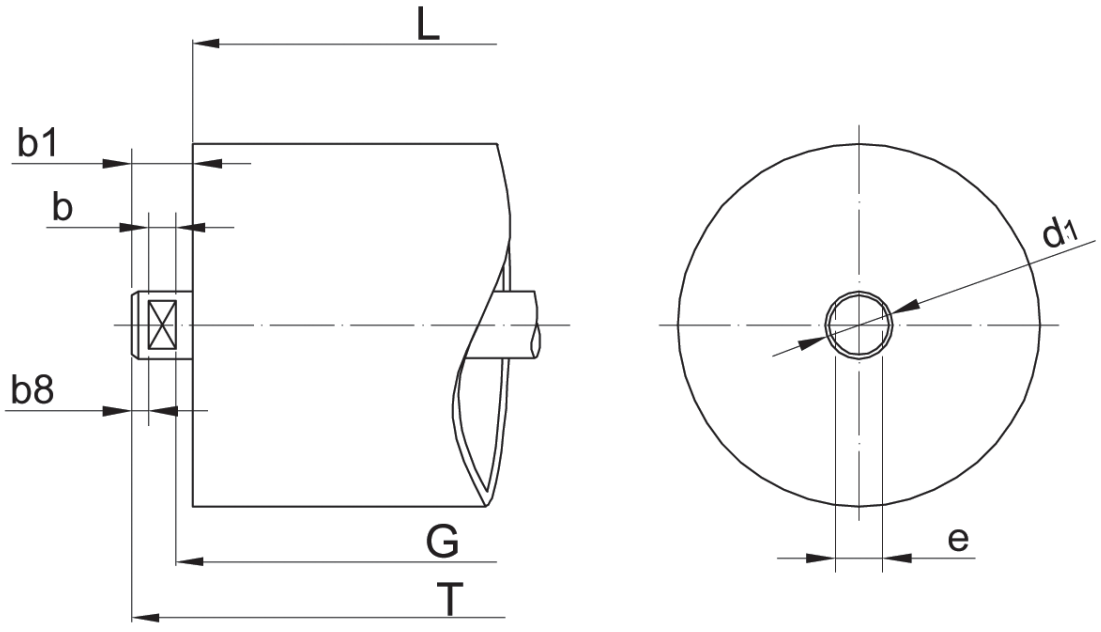

A0

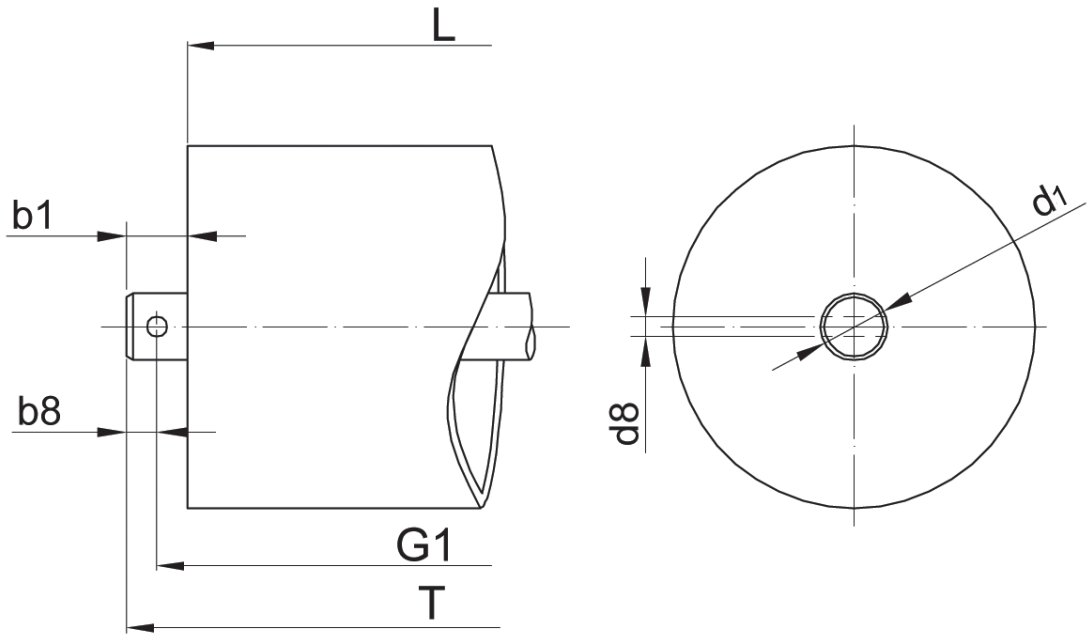

A016

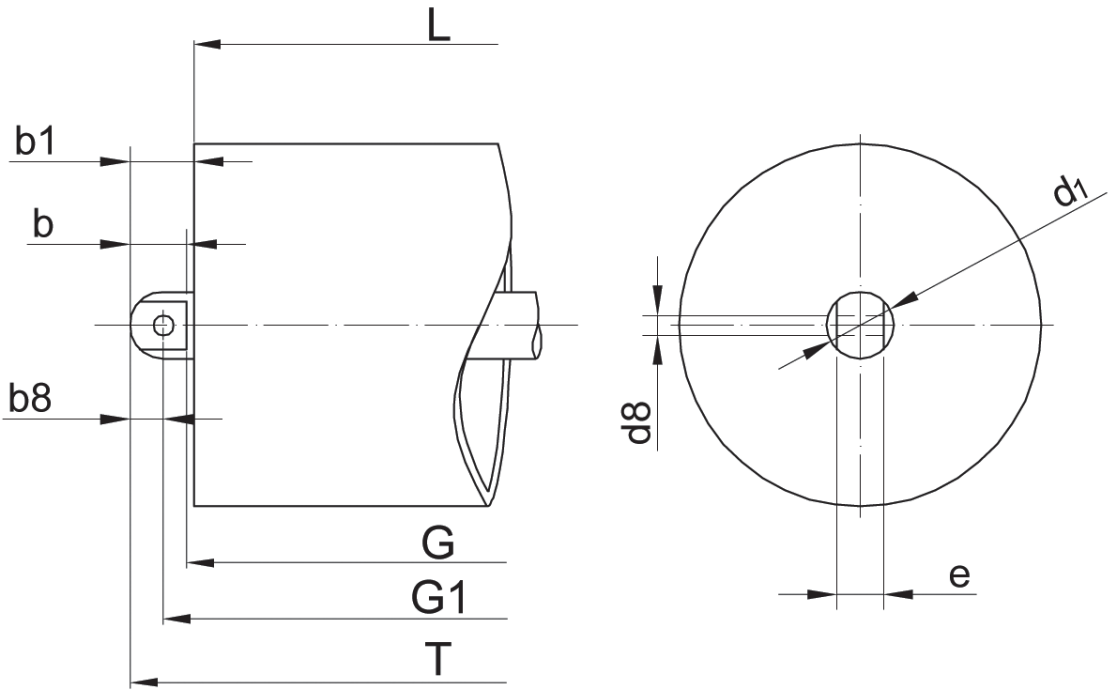

METALLIC ROLLER **RM**

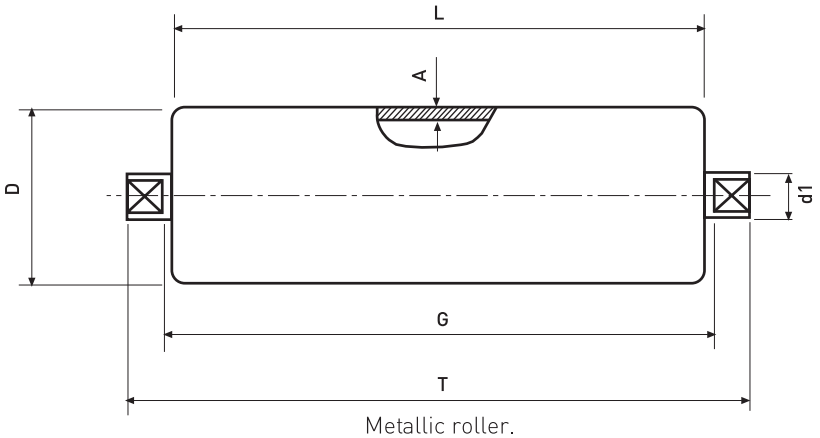

Metallic roller.

Producto Range

		(D) Tube diameter (mm)											(A) Tube thickness (mm)				
	D/A	63.5/3	70/3	76/3	89/3	102/3.5	108/3.5	114/3.6	127/4	133/4	139/4.5	152/4	159/4.5	165/4.5	178/5	193/6.3	219/8
Bearing	6204																
	6205																
	6305																
	6306																
	6307																
	6308																
	6310																
	6312																

Roller weights

		Roller lenght L (mm)															
D	d1(mm)	200	250	315	380	465	530	600	670	750	950	1150	1400	1600	1800	2000	2200
63	20	2/1.3	2.4/1.6	2.9/1.9	3.4/2.2	4.1/2.7	4.6/3	5.2/3.5	5.7/3.8	6.4/4.3	8/5.3	9.6/6.4	11.6/7.7	13.2/8.8	14.8/9.9	16.4/10.9	18/12
89	20	2.4/1.8	2.9/2.2	3.6/2.6	4.2/3	4.8/3.6	5.4/4.1	6/4.5	6.6/5	7.8/5.7	9.7/7.0	11.2/8.2	14/10.2	16.1/11.27	18/13.1	20/14.5	21.9/15.9
	25	3.1/2.2	3.6/2.5	4.3/3.1	5/3.4	5.9/4	6.6/4.4	7.4/5.0	8.3/5.6	9.2/6.2	11.4/7.6	13.6/9.0	16.4/10.8	18.6/12.2	20.813.6	23/15	25.2/16.4
	30	3.5/2.2	4.2/2.6	5/3.2	5.8/3.5	6.9/4.1	7.8/4.5	8.7/5	9.6/5.7	10.7/6.3	13.3/7.7	15.9/9.1	19.1/10.9	21.7/12.3	24.3/13.8	26.9/15.2	29.5/16.5
101.6	20	2.9/2.2	3.4/2.6	4.2/3.2	4.9/3.7	5.9/4.5	6.6/5	7.4/5.7	8.2/6.3	9.1/7.0	11.4/8.7	13.7/10.5	16.6/12.7	18.8/14.4	21.1/16.2	23.4/17.9	25.7/19.7
	25	3.6/2.7	4.3/3.2	5.1/3.8	5.9/4.3	7.0/5.1	7.8/5.6	8.7/6.2	9.6/6.9	10.6/7.6	13.2/9.4	15.7/11.1	18.9/13.3	21.4/15	24/16.8	26.5/18.5	29/20.2
108	20	3/2.3	3.6/2.8	4.4/3.4	5.1/3.9	6.2/4.8	6.9/5.3	7.8/6.1	8.6/6.7	9.6/7.5	12/9.3	14.4/11.2	17.4/13.5	19.7/15.3	22.1/17.2	24.5/19	26.9/20.9
	25	3.7/2.8	4.4/3.3	5.3/4.0	6.1/4.5	7.3/5.4	8.1/5.9	9.1/6.6	10/7.3	11/8.0	13.7/9.9	16.4/11.8	19.7/14.1	22.3/15.9	25/17.8	27.6/19.6	30.3/21.5
	30	3.7/2.6	5.7/3.7	6.6/4.2	7.6/4.8	8.9/5.6	9.9/6.3	11/7	12/7.5	13.2/8.3	16.2/10.1	19.3/12.1	23/14.3	26.1/16.3	29.1/18.1	32.1/19.9	35.2/21.9
	35					9.8/6.2	10.8/6.7	11.9/7.3	13/7.9	14.2/8.5	17.3/10.1	20.4/11.7	24.3/13.7	27.4/15.3	30.5/16.9	33.6/18.5	36.7/20.1
	40							17/10	18/10.5	19/11.1	22/12.5	25/13.9	29.5/15.6	32.5/17	35/18.4	39/19.8	42/21.2
133	20	4.1/3.6	4.8/4.2	5.7/4.9	6.5/5.6	7.7/6.6	9.0/7.4	9.10/8.3	11.1/9.2	12.4/10.3	15.5/12.8	18.5/15.3	22.4/18.5	25.5/21.1	28.6/23.7	31.7/26.2	34.8/28.8
	25	4.2/3.5	5.7/4.6	6.8/5.5	7.8/6.2	9.3/7.4	10.4/8.2	11.5/9.0	12.7/10	14/11.0	17.4/13.6	20.7/16.1	24.9/19.3	28.3/21.9	31.6/24.4	35/27	38.3/29.5
	30	5.1/4.1	6.8/4.8	8.1/6.4	9.2/6.4	10.8/7.5	12/8.4	13.3/9.3	14.6/10.1	16.1/11.2	19.9/13.8	23.6/16.4	28.2/19.5	31.9/22.1	35.7/24.7	39.4/27.2	43.1/29.8
	35					12/7.9	13.4/8.8	14.8/9.5	16.210.5	17.9/11.6	22/14.2	26.1/16.7	31.2/19.9	35.3/22.4	39.4/25	43.5/27.5	47.6/30.1
	40							19.1/13.5	20.6/14.3	22.3/15.3	26.5/17.7	30.7/20.1	35.9/23.1	40.1/25.5	44.3/27.9	48.5/30.3	52.7/32.7
159	25	6.6/5.7	7.7/6.6	9.2/7.9	10.7/9.1	12.7/10.8	14.1/11.9	15.813.3	17.4/14.7	19.2/16.2	23.8/20	28.4/23.8	34.1/28.5	38.7/32.3	43.3/36.1	47.9/39.9	52.5/43.7
	30	6.4/5.4	8.7/6.7	10.3/7.9	11.6/8.8	14/10.7	15.6/12	17.4/13.4	19.1/14.6	21.1/16.2	26/19.9	31/23.8	37.2/28.5	42.2/32.4	47.1/36.1	52.1/39.9	57/43.8
	35					4.9/10.8	16.6/12	18.5/13.2	20.4/14.7	22.5/16.2	27.9/20.1	33.2/23.8	39.9/28.6	45.2/32.3	50.6/36.2	55.9/39.9	61.5/43.7
	40							22.8/15.4	24.9/16.8	27.2/18.3	33/22.1	38.9/25.9	46.2/30.7	52.1/34.5	57.9/38.3	63.8/42.	69.6/45.9
	50							27.8/20.5	30.3/22.1	33.1/24.0	40.1/28.6	47.1/33.2	55.8/38.6	62.8/43.5	69.8/48.1	76.8/52.7	83.8/57.3
	60							32.3/25.1	35.2/27.2	38.6/29.6	47.0/35.6	55.4/41.6	65.9/49.1	74.3/55.1	82.7/61.1	91.1/67.1	99.5/73.1
193	40							27.2/19.4	29.6/20.9	32.3/22.6	39.1/26.8	45.9/31.0	54.4/36.2	61.2/40.4	68.0/44.6	74.8/48.8	81.6/53.0
	50							35.6/28.4	39.0/30.9	42.8/33.8	52.4/41.0	62.0/48.2	74.0/57.2	83.6/64.4	93.2/71.6	102.8/78.8	112.4/86.0
	60							41.8/31.0	45.7/33.6	50.1/36.6	61.1/44.0	72.5/51.4	85.8/60.6	96.8768.0	107.8/75.4	118.8/82.8	129.8/90.2

Roller weight Kg/Roller rotating parts weight (Kg).

IMPACT ROLLER **RA**

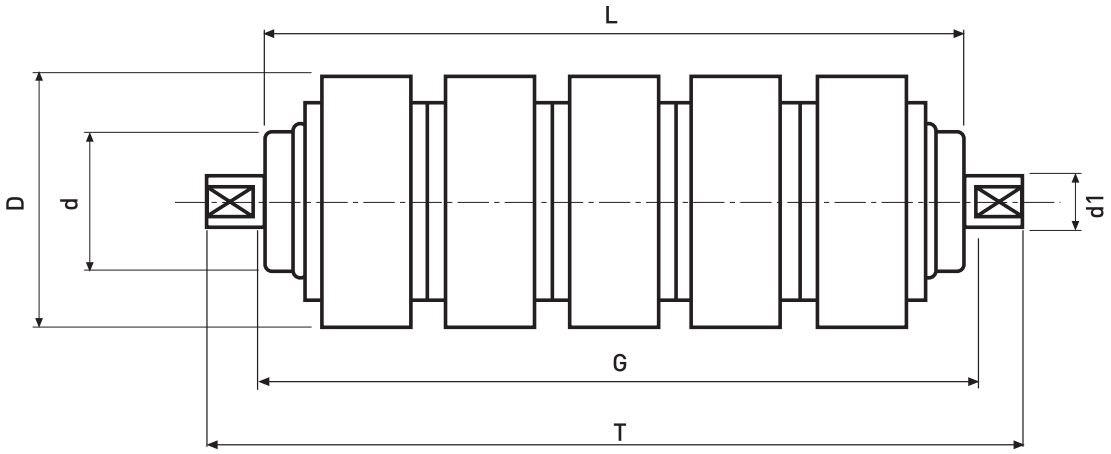

Impact Roller.

Product Range

RA

6204	D(mm)	89	108	133	159	127	133	139,7	152	159	152	159				
	d(mm)	63,5	63,5	70	70	89	89	89	89	89	108	108				
6205	D(mm)	127	133	139,7	152	159	152	159	165	180	193	180	193	215	215	252
	d(mm)	89	89	89	89	89	108	108	108	108	108	133	133	133	159	159
6305	D(mm)	127	133	139,7	152	159	152	159	165	180	193	180	193	215	215	252
	d(mm)	89	89	89	89	89	108	108	108	108	108	133	133	133	159	159
6306	D(mm)	127	133	139,7	152	159	152	159	165	180	193	180	193	215	215	252
	d(mm)	89	89	89	89	89	108	108	108	108	108	133	133	133	159	159
6307	D(mm)	152	159	165	180	193	180	193	215	215	252					
	d(mm)	108	108	108	108	108	133	133	133	159	159					
6308	D(mm)	152	159	165	180	193	180	193	215	215	252					
	d(mm)	108	108	108	108	108	133	133	133	159	159					
6310	D(mm)	180	215	215	252											
	d(mm)	133	133	159	159											
6312	D(mm)	215	252													
	d(mm)	159	159													

Roller weights

		Roller length L (mm)															
d/D	d1(mm)	200	250	315	380	465	530	600	670	750	950	1150	1400	1600	1800	2000	2200
63/89	20	2,2/1,5	2,7/1,9	3,9/2,8	4,6/3,3	5,7/4,2	6,4/4,7	7,2/5,3	8/6	8,9/6,6	11,3/8,5	13,5/10,2	16,4/12,4	18,7/14,2	20,9/15,9	23,3/17,7	25,5/19,4
63,5/108	20	3,2/2,4	3,8/3	4,7/3,6	5,6/4,3	6,975,4	7,8/6,1	8,7/6,8	9,8/7,8	10,9/8,6	13,8/11	16/12,8	20,1/16,1	23,1/18,6	25,8/20,8	28,8/23,2	31,5/25,4
89/133	20	3,9/3,1	4,7/3,9	5,8/4,7	7,1/5,8	8,5/7,1	9,6/7,9	11,0/9,1	12,0/10,0	13,5/11,2	16,8/14	20,6/17,3	24,7/20,7	28,5/24	31,8/26,8	35,6/30	38,4/32,8
	25	5,1/3,7	6/4,4	7,1/5,3	8,576,4	9,6/7,3	11,2/8,5	12,3/9,3	13,8/10,5	15,4/11,8	19/14,6	23/17,5	27,5/21,3	31,5/24,6	35,1/27,4	39,1/30,6	42,7/33,4
89/159	20	4,6/4,1	5,7/5	6,8/6	8,2/7,2	9,7/8,5	12,1/10,7	13,6/12	15,3/13,5	17/15	24/21	28,6/25,7	34,8/31,3	39,7/35,7	44,4/39,9	49,5/44,5	54,6/49,3
	25	6,6/5,2	7,7/6,1	9,4/7,6	11,1/9	13,5/11,1	15,1/12,4	16,9/13,9	19,2/15,9	21,1/17,5	26,7/22,3	31,8/26,3	38,5/32,3	44,2/37,3	49,3/41,6	55/46,5	60,1/50,8
108/159	20	5,2/4,6	6,8/6,1	8,3/7,4	9,7/8,7	12,1/10,9	13,6/12,2	15,3/14	17/15,3	18,7/16,8	24/21,6	28,6/25,8	34,8/31,3	39,7/35,7	44/39	49,5/44,5	54,6/49,1
	25	6,2/5,8	7,3/5,7	8,8/7	10,3/8,2	12,5/10,1	13,9/11,2	15,6/12,6	17,4/14,1	19,1/15,5	24,1/19,7	28,7/23,2	34,6/28,4	39,5/32,6	44,2/36,5	49,1/40,6	53,7/44,4
	30			9,7/7,2	11,4/8,5	13,6/10,2	15,3/11,6	17,1/13	19,1/14,6	20,9/15/9	26,2/20	31,2/23,9	37,5/28,7	42,9/33	47,9/36,8	53,2/40,9	58,2/44,8
	40					17,5/12,6	19,5/14,1	22/15,8	24,3/17,4	26,7/19	33/23,4	39/27,7	47/33	53,4/37,2	59,6/41,6	66/46	72,2/50,2
108/180	20	6,7/6,2	8/7,4	9,8/8,9	11,5/10,5	14,3/13	16/14,7	18/16,7	20/18,4	22/20,2	28,4/26	33,9/31	41/37,6	46,9/42,9	52,4/47,9	58,5/53,5	64,5/59
	25	7,2/5,8	8,6/7	10,9/9,1	13,1/11	15,8/13,4	17,3/14,6	19,7/16,7	22/18,7	24,5/20,9	30,7/26,3	37/31,5	44,6/38,4	50,8/43,9	57,1/49,4	63,2/54,7	69,5/60,2
	30			11,8/9,3	14,2/11,3	17/13,6	18,7/15	21,2/17,1	23,6/19,1	26,3/20,1	31,4/25,5	39,5/32,2	47,5/38,7	54,2/44,3	60,8/49,7	67,3/55	74/60,6
	40					21,1/16,2	23,7/18,2	26,5/20,3	29,3/22,4	32,3/24,6	40/30,2	47,5/35,9	56,8/42,7	64,4/48,4	72/54	79,6/59,6	87,1/65,2
108/193	20	7,6/7	8,9/8,2	10,9/10	12,9/11,8	15,9/14,7	17,9/16,5	20,2/18,9	22,4/20,6	24,64/22,7	31,6/29,3	37,8/34,9	45,9/42,4	53,36/48,3	58,5/54	65,3/60,3	71,6/66,4
	25	7,7/6,3	9,3/7,7	11,9/10,1	14,4/12,3	17,4/15	19/16,3	21,7/18,7	24,4/21,1	27,1/23,5	34,1/29,7	41,1/35,6	49,6/43,4	56,5/49,6	63,5/55,8	70,4/61,9	77,4/68,1
	30			12,8/10,3	15,5/12,6	18,6/15,2	20,4/16,7	23,2/19,1	26/21,5	28,9/23,9	36,2/30	42/34,9	52,5/43,7	59,9/50	67,2/56,1	74,5/62,2	81,9/6,5
	40					22,8/17,9	25,6/20	28,6/22,4	31,6/24,7	34,9/27,1	43/33,6	51,3/39,6	61,3/47,2	69,5/53,4	77,6/59,5	85,9/65,9	94/72
133/215	20	9,6/9	11,4/10,7	14/13	16,4/15,4	20,3/19,1	22,8/21,5	25,7/24,4	28,5/26,8	31,4/29,5	40,3/37,9	48,2/45,2	58,6/55	66,7/62,7	74,6/70,1	83,1/78,1	91,7/86
	25	9,4/8	11,8/10,2	15,1/13,3	18,3/16,2	21,9/19,5	24,1/21,4	27,4/24,4	30,8/27,5	34,2/30,6	43,1/38,7	51,8/46,3	62,5/56,3	71,3/64,4	80,1/72,4	88,9/80,4	97/88,3
	30			16,1/13,6	19,4/16,5	23,1/19,7	25,4/21,7	28,9/24,8	32,4/27,9	36/31	45,3/39,1	54,4/47,1	65,5/56,7	74,6/64,7	83,9/72,8	93/80,7	102/88,6
	35					24,2/19,7	26,7/21,7	30,3/24,7	33,9/27,8	37,7/31	47,3/39	56,8/47	68,4/56,7	77,9/64,6	87,5/72,7	97/80,6	106,3/88,6
159/215	25			17,3/16	20,8/19,3	23,7/21,8	27,4/25,2	30,1/27,7	33,8/31,1	37,5/34,7	46,5/43,5	53,4/52,45	67,3/62	77,1/71,6	86,9/80,6	95,7/88,7	105/97
	30			16,4/14	19,4/16,5	23,5/20,1	25,9/22,2	29,3/25,2	32,7/28,2	36,4/31,4	45,4/39,2	54,5/47,2	65,7/56,9	74,8/64,9	83,8/72,7	93/80,7	102/88,6
	35					24,4/19,9	26,9/21,9	30,4/24,8	34/27,9	37,8/31,1	47,3/39	56,7/46,9	68,4/56,7	77,8/64,5	87,3/72,5	96,8/80,4	106,3/88,4
	40					27,8/23	31,2/25,7	34,9/27,6	38,6/30,5	42,5/33,6	52,5/41,6	62,5/49,5	74,8/59,3	84,8/67,2	94,7/75,1	104,8/85,1	114,7/107
	50					34,2/26,5	37,56/28,9	42,2/32,4	46,8/36	51,8/39,7	64,2/49	76,5/58,3	91,8/69,7	104,2/79	116,6/88,4	129/97	141,4/107
	60					40,4/29,3	44,18/37,7	49,3/34,3	54,4/38,7	59,9/42,5	73,6/51,8	87,4/61,2	104/72,5	118/82,9	131,8/91,2	145,6/100,5	159,4/109,8

Roller weight Kg/Roller rotating parts weight (Kg).

RETURN ROLLER WITH DISCS **RLD**

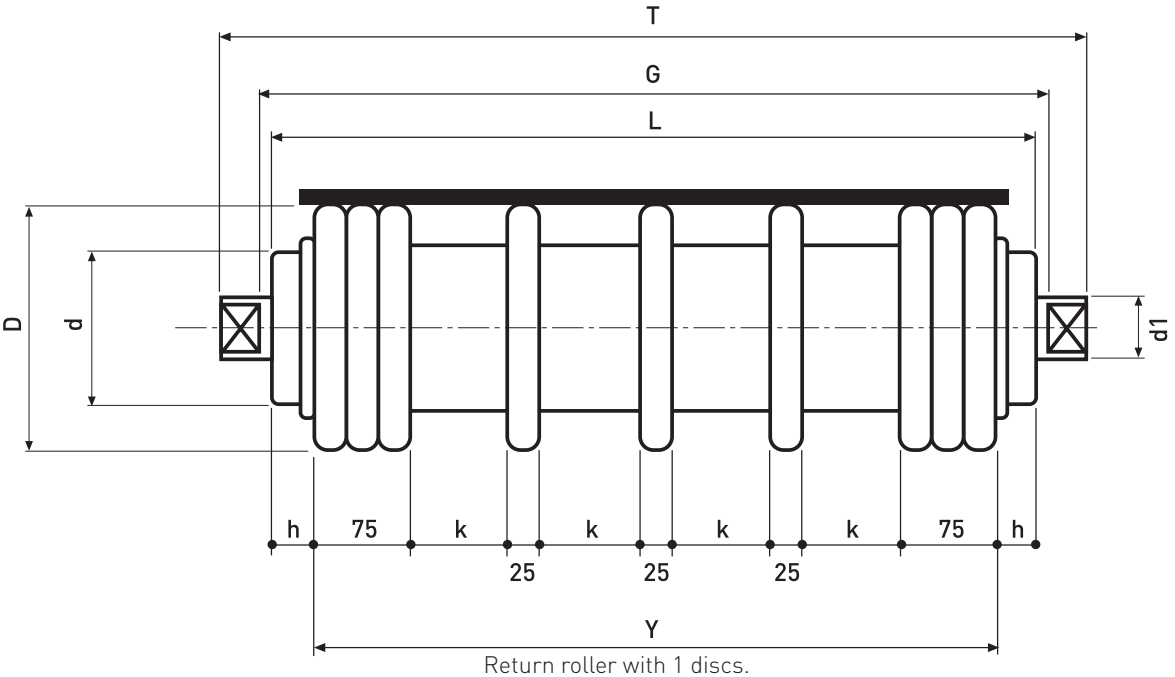

Return roller with 1 discs.

Product Range

6204	D(mm)	108	108	133	159	133	152			
	d(mm)	63,5	70	70	89	89	89			
6205	D(mm)	133	152	159	180	180	193	180	193	219
	d(mm)	89	89	89	108	108	108	114,3	133	159
6305	D(mm)	133	152	159	159	180	193	180	193	219
	d(mm)	89	89	89	108	108	108	114,3	133	159
6306	D(mm)	133	152	159	159	180	193	180	193	219
	d(mm)	89	89	89	108	108	108	114,3	133	159
6308	D(mm)	159	180	193	193	219				
	d(mm)	108	108	108	133	159				

Belt width	400	500	650	800	1000	1200	1400	1600	1800	2000	2200
h	77,5	72,5	72,5	100	127,5	137,5	137,5	150	125	137,5	137,5
k	85	85	95	100	85	100	95	100	100	95	100
y	345	455	605	750	895	1125	1325	1500	1750	1925	2125
Nº	3+1+3	3+2+3	3+4+3	3+4+3	3+6+3	3+7+3	3+9+3	3+10+3	3+12+3	3+14+3	3+15+3

Roller weights

		Roller length L (mm)										
d/D	d1(mm)	500	600	750	950	1150	1400	1600	1800	2000	2200	2400
63.5/108	20	5.8/4.5	6.6/5.0	8.1/6.2	10/7.6	12/9	14.3/10.8	16.4/12.4	17.2/12.7	19.1/14.1	21/15.5	22.7/16.7
89/133	20	7/5.7	8/6.5	9.8/7.9	12.2/9.8	14.64/11.8	17.4/13.9	20/16	21/16.5	23.3/18.3	26.6/21.1	27.7/21.7
	25	9.5/7.4	9.9/7.5	11.8/8.8	14.3/10.5	17/12.4	20.3/14.8	23.1/16.8	25.7/18.6	28.6/20.7	29.9/21.3	32.4/23.0
	30	9.6/6.6	11.3/7.8	13.3/8.9	16.1/10.6	19/12.5	22.57/14.6	25.6/16.5	28.4/18.2	31.52/20.2	34.5/22.1	37.3/23.8
89/159	20	7.9/6.6	9.0/7.5	11/9.2	13.7/11.3	16.4/13.5	19.6/16	22.4/18.45	23.56/19	26.1/21.2	28.7/23.3	31/25.11
	25	10.45/8.4	10.9/8.5	13/10	15.7/12	18.7/14.2	22.3/16.8	25.4/19.1	28.2/21.2	31.4/23.6	32.9/24.3	35.6/26.26
	30	10.5/7.6	12.4/8.9	14.6/10.3	17.7/12.2	20.9/14.4	24.8/16.8	28.1/19.1	31.2/21.1	34.6/23.4	37.9/25.6	41.1/27.6
108/159	20	9.2/7.9	10.5/8.9	12.8/11.0	15.9/13.5	19/16.2	22.7/19.2	26/22.0	27.3/22.8	30.3/25.3	33.4/28	36/30.1
	25	11.68/9.6	12.1/9.7	14.5/11.5	17.5/13.8	20.9/16.35	25/19.4	28.4/22.2	31.6/24.5	35.2/27.3	36.7/28.2	39.8/30.5
	30	11.8/8.8	13.9/10.4	16.3/12	19.8/14.3	23.4/16.8	27.7/19.8	31.4/22.4	35/24.8	38.7/27.5	42.4/30	46/32.5
	40	17.8/12.6	20.2/14	23.7/16	28/18.4	32.7/21	38.3/24.1	43/27	47.5/29.4	52.3/32.3	57/35	61.5/37.5
108/193	20	10.4/9.1	11.8/10.3	14.6/12.6	18/15.6	21.6/18.7	25.7/22.2	29.5/25.5	31/26.45	34.3/29.4	37.8/32.3	40.9/34.8
	25	12.8/10.7	13.3/11	15.9/13	19.3/15.5	23/18.4	27.4/21.9	31.2/24.9	34.7/27.6	38.6/30.7	40.3/37.7	43.7/34.3
	30	13/10	15.2/11.7	17.9/13.6	21.7/16.3	25.7/19.1	30.4/22.5	34.5/25.5	38.3/28.2	42.5/31.2	46.5/34.2	50.4/37
	40	19/13.8	21.6/15.4	25.3/17.6	30/20.3	35/23	41/26.8	46/30	50.8/32.7	55.9/36	61/39	65.8/41.8

Roller weight Kg/Roller rotating parts weight (Kg).

RETURN DISC ROLLER WITH 1 FLAT END **RL1T**

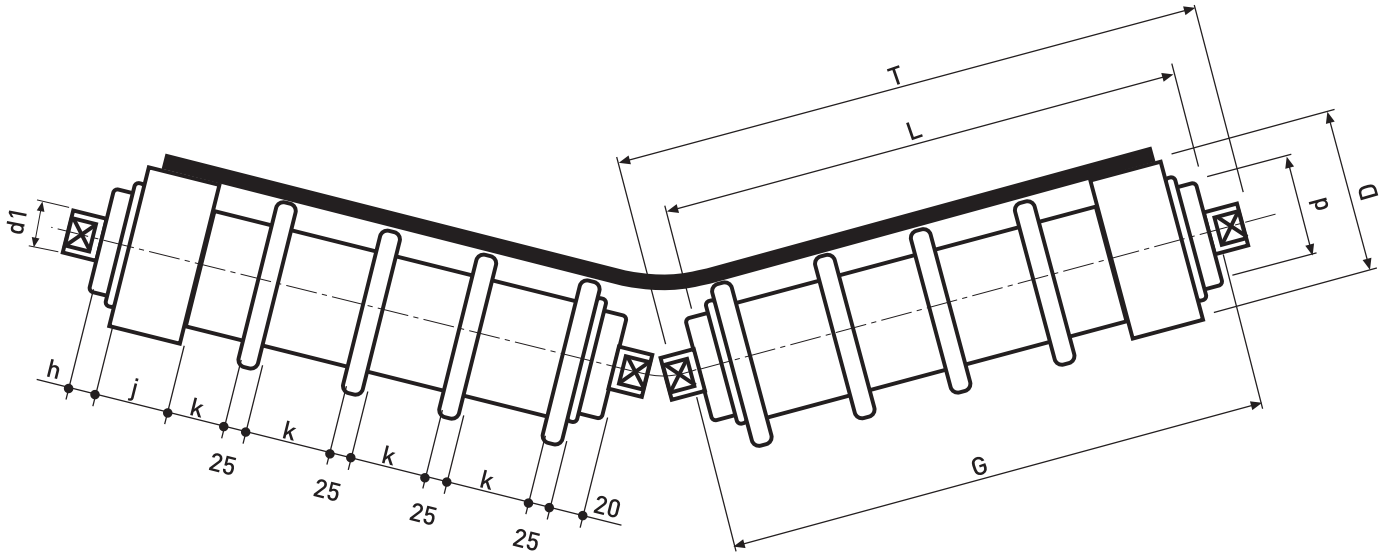

Return roller with 1 flat end.

Product Range

6204	D(mm)	108	108	133	127	133	152			
	d(mm)	63	70	70	89	89	89			
6205	D(mm)	127	133	152	159	159	180	193	180	193
	d(mm)	89	89	89	89	108	108	108	114,3	133
6305	D(mm)	127	133	152	159	159	180	193	180	193
	d(mm)	89	89	89	89	108	108	108	114,3	133
6306	D(mm)	127	133	152	159	159	180	193	180	193
	d(mm)	89	89	89	89	108	108	108	114,3	133
6308	D(mm)	159	180	193	193					
	d(mm)	108	108	108	133					

Belt width	400	500	650	800	1000	1200	1400	1600	1800	2000	2200
h				30	65	30	40	35	30	25	20
j				100	200	200	240	240	240	240	240
k				60	60	70	80	80	80	80	80
Nº				3	4	4	4	5	6	7	8

Roller weights

		Roller length L (mm)							
d/D	d1(mm)	465	600	700	800	900	1000	1100	1200
89/133	20	6.9/5.5	8.5/6.8	9.8/7.8	12.3/10	13.6/11.1	14.8/12	16.1/13	16.9/13.9
	25	8.3/6.4	10.1/7.6	11.5/8.7	14.1/10.9	15.5/11.9	16.9/12.9	18.3/13.9	19.1/14.4
	30	9.5/6.75	11.45/7.95	12.94/8.9	15.65/11	17.2/12	18.7/13	20.23/14	21.75/14.9
89/159	20	8.1/6.7	9.9/8.2	11.3/9.3	14.8/12.5	16.3/13.8	17.6/14.8	19.1/16	20.1/17.0
	25	9.5/7.6	11.5/9	13/10.2	16.6/13.4	18.2/14.6	19.7/15.7	21.3/16.4	22.1/17.4
	30	11/8.2	13.2/9.7	15/11.0	18.1/13.5	19.9/14.7	21.7/16	23.4/17.1	25.2/18.3
108/193	20	10.7/9.3	13/11.3	14.8/12.8	19.8/17.5	21.6/19.1	23.5/20.7	25.4/22.3	26.8/23.7
	25	12.2//10.3	14.7/12.2	16.6/13.8	21.7/18.5	23.6/20	25.7/21.7	27.7/23.3	29/24.2
	30	14.4/11.6	17.4/13.9	19.6/15.6	23.8/19.8	26.1/21	28.43/22.7	30.7/24.4	33/26.1
	40	19.29/14.4	22.59/16.4	25.16/18.0	30.94/22.73	33.54/24.4	36.15/26.0	38.76/27.6	41.36/29.2

Roller weight Kg/Roller rotating parts weight (Kg).

RETURN DISC ROLLER WITH 2 FLAT ENDS **RL2T**

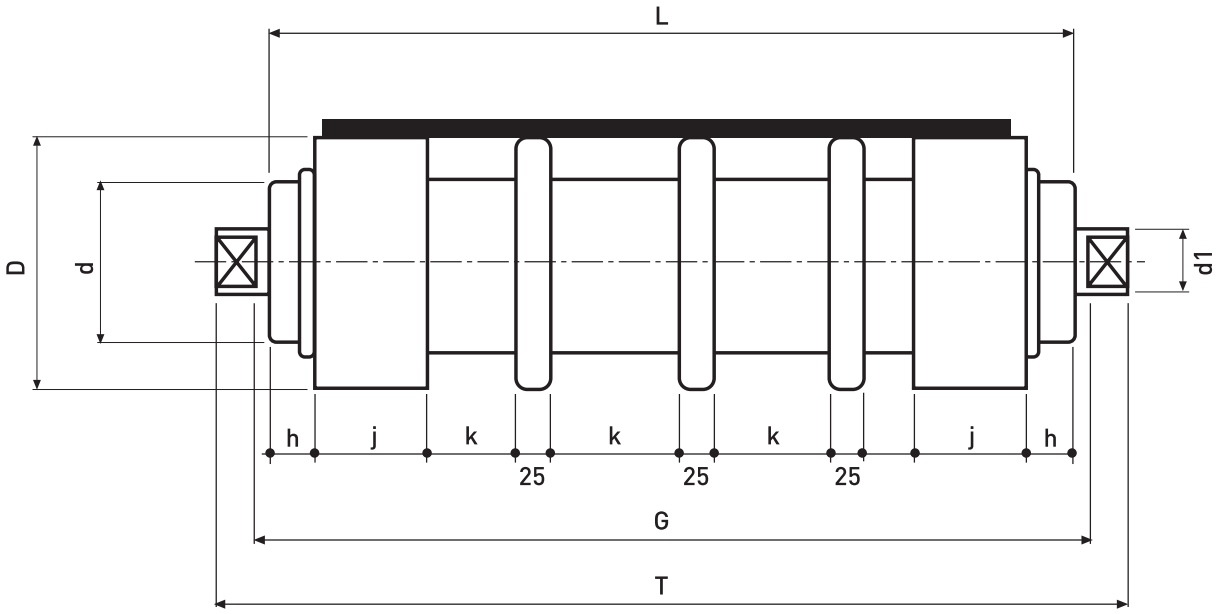

Return roller with 2 flat ends.

Product Range

6204	D(mm)	108	108	133	127	133	152			
	d(mm)	63	70	70	89	89	89			
6205	D(mm)	127	133	152	159	159	180	193	180	193
	d(mm)	89	89	89	89	108	108	108	114,3	133
6305	D(mm)	127	133	152	159	159	180	193	180	193
	d(mm)	89	89	89	89	108	108	108	114,3	133
6306	D(mm)	127	133	152	159	159	180	193	180	193
	d(mm)	89	89	89	89	108	108	108	114,3	133
6308	D(mm)	159	180	193	193					
	d(mm)	108	108	108	133					

Belt width	400	500	650	800	1000	1200	1400	1600	1800	2000	2200
h	12,5	20	22,5	35	50	45	50	55	60	65	70
j	80			240					280		
k	60	60	70	60	60	70	70	70	70	70	70
Nº	3	4	5	4	6	8	10	12	14	16	18

Roller weights

		Roller length L (mm)										
d/D	d1(mm)	500	600	750	950	1150	1400	1600	1800	2000	2200	2400
89/133	20	8.2/6.9	9.8/8	11.5/9.6	16.2/13.8	18.6/15.7	21.6/18	24.2/20.2	26/21.5	27.8/22.8	30.6/25.1	32.9/26.9
	25	9.7/7.6	11.1/8.6	13.3/10.3	18.3/14.5	21/16.3	24/18.4	27.1/20.8	29.9/22.8	32.7/24.9	34/25.4	36.6/27.2
	30	10.9/8	12.4/8.9	14.6/10.2	20/14.5	22.8/16.2	26.4/18.5	29.5/20.4	32.5/22.3	35.5/24.25	38.5/26.1	41.6/28
89/159	20	9.9/8.6	11.4/9.9	13.9/12	19.6/17.1	22.5/19.6	26.1/22.6	29.2/25.27	31.46/26.9	33.6/28.6	37/31.5	39.8/33.8
	25	11.4/9.4	13/10.6	15.7/12.6	21.6/17.8	24.6/20.1	28.2/22.6	31.9/25.6	35.28/28.2	38.5/30.7	40.12/31.5	43.1/33.8
	30	12.8/9.9	14.6/11.1	17.2/12.8	23.5/18.1	26.9/20.3	31.2/23.25	34.7/25.7	38.3/28.2	42/30.6	45.5/33.1	49/35.5
108/193	20	13.5/12.23	15.6/14.11	8.9/17.06	26.7/24.3	30.7/27.8	35.6/32.1	39.9/35.9	42.9/38.39	45.8/40.8	50.5/45	54.2/48.2
	25	15/13	17.2/14.8	20.6/17.6	28.3/24.6	32.4/27.8	37/31	42/35.7	46.34/39.3	50.6/42.8	52.7/44	56.7/47.3
	30	16.9/14	19.2/15.7	22.6/18.3	30.9/25.5	35.3/28.8	40.9/33	45.6/36.6	50.3/40.2	55/43.8	59.7/47.3	64.4/51
	40	22.4/17.1	25/18.8	28.7/21	40.1/30.4	44.8/33.2	51/37	56.2/40.1	61.4/43.3	66.6/45.5	71.8/49.8	77/53

Roller weight Kg/Roller rotating parts weight (Kg).

HELICOIDAL RETURN ROLLER **RLH**

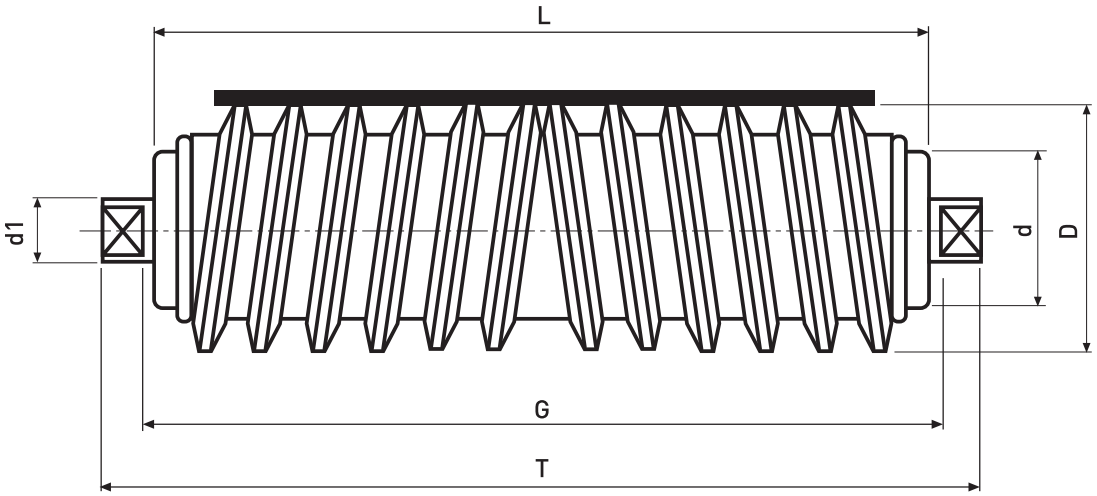

Helicoidal return roller.

Product Range

RLH

6204	D(mm)	108	133	159
	d(mm)	63,5	89	89
6205	D(mm)	133	159	180
	d(mm)	89	89	108
6305	D(mm)	133	159	180
	d(mm)	89	89	108
6306	D(mm)	133	159	180
	d(mm)	89	89	108

Roller weights

		Roller length L (mm)										
d/D	d1(mm)	500	600	750	950	1150	1400	1600	1800	2000	2200	2400
63.5/108	20	7.2/5.9	8.3/6.7	10.2/8.2	12.9/10.5	15.6/12.6	18.9/15.4	21.6/17.6	24.3/19.8	27/22	29.7/24.2	32.4/26.4
89/133	20	8/6.8	9.3/7.7	11.4/9.5	14.4/12	17.4/14.5	21.1/17.6	24.1/20.2	27.2/22.7	30.2/25.3	33.2/27.7	36.2/30.3
	25	9.6/7.5	10.6/8.2	13.4/10.4	16.5/12.7	19.7/15.1	23.8/15.2	27/20.6	30.1/23	33.4/25.5	36.7/28	40/30
	30	10.9/8	12.5/9	15.3/11	18.8/13.3	22.4/15.8	27.3/19.3	31.1/22	35/24.8	39/27.7	43/30.6	47/33.5
89/159	20	9.5/8.2	10.9/9.4	13.4/11.5	17/14.6	20.5/17.7	25/21.4	28.524.5	32/27.5	35.6/30.6	39.2/33.7	42.7/36.8
	25	11/9	12.2/9.8	15.4/12.4	19/15.2	22.6/18.1	27.4/21.9	30.9/24.6	34.6/27.5	38.4/30.5	42.2/33.6	43/36.6
	30	12.3/9.3	14.1/10.6	17.2/12.9	21.2/15.7	25.3/18.7	30.8/22.9	35.1/26	39.5/29.8	44.1/39.7	48.6/36.2	53.1/39.6

Roller weight Kg/Roller rotating parts weight (Kg).

GUIDE ROLLER **RGU**

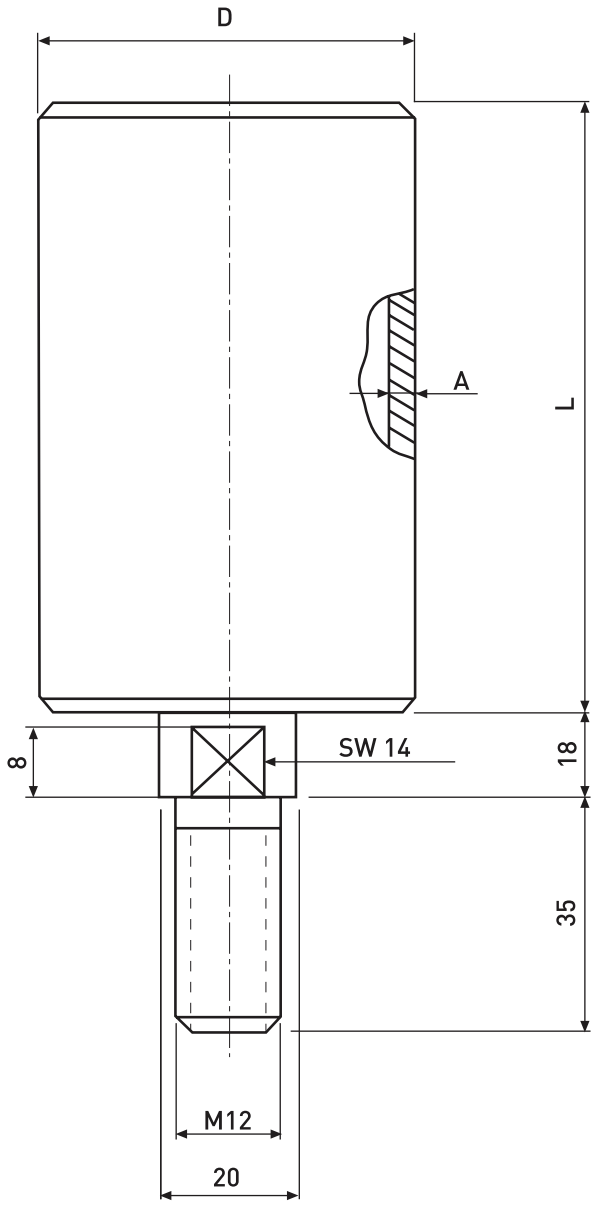

Guide roller

D	A	L
63,5	3	100
89	3	
60	8,7	
89	6,3	

ATHENS: 206 Athinon Ave, 104-42 Greece
Tel: (0030) 210 515 1632, Fax: (0030) 210 515 0741

THESSALONIKI: 6th Km Thessaloniki-Kalochori, 570-09 Greece
Tel: (0030) 231 075 2800, Fax: (0030) 231 075 2070

www.optimise.gr
info@optimise.gr